SIM

SPACE
INTERFEROMETRY
MISSION

SIM Industry Briefing

Chris Jones

16 March 1998

SIM

SPACE INTERFEROMETRY MISSION

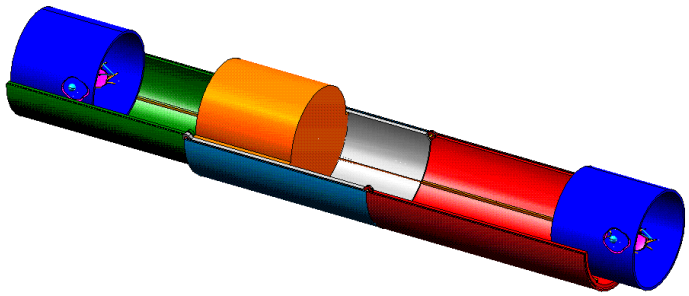

Schedule

• Phase A Start	Oct '97
• Annual OSS Origins Review	Apr '98
• SIM IPR (Implementation Plan Rev)	Oct '98
• PNAR (Prelim Non Advocate Rev)	Apr '99
• Phase B Start	Jul '99
• SIM System Testbed Operational	Aug '00
• NAR (Non Advocate Rev)	Mar '01
• PDR (Prelim Design Rev)	Mar '01
• Phase C/D Start	Jul '01
• CDR (Critical Design Rev)	Apr '02
• Launch	Jun '05
• End of Mission	Jul '10

Significance in fulfilling Strategic Plan:

- High Precision Astrometry (AIM requirements)
- Synthetic aperture imaging
- Technology precursor to Terrestrial Planet Finder

Description & accomplishments:

- 2 collector pods on a 10 meter baseline
- Astrometry : Global 4 microarcsecond- 20th magnitude object
- 10 milli-arcsecond synthesized imaging
- Single interferometer operation demonstrated on a flexible structure
- Several interferometer components environmentally tested

Participants & Collaborations:

- Industry participation: SIM Studies
  - -TRW lead, with Kodak and Hughes Danbury Optical Systems(HDOS)
  - -Lockheed-Martin lead with Honeywell and Harris
  - -Ball Aerospace lead, with Boeing and SAO
- MIT
- Space Telescope Science Institute

Technologies Validated

Nanometer Stabilization

- Controlled Optics
- Vibration Isolation & Structural Quieting
- Precision Deployable Structure

Picometer Sensing

- Laser Metrology
- Astrometric & Nulling Beam Combiner

Interferometer I&T

- Integrated Modeling Optical/Mechanical/Thermal Control
- End-to-End Integration, Test & Operation of Interferometers

SIM

SIM Synoptic Schedule

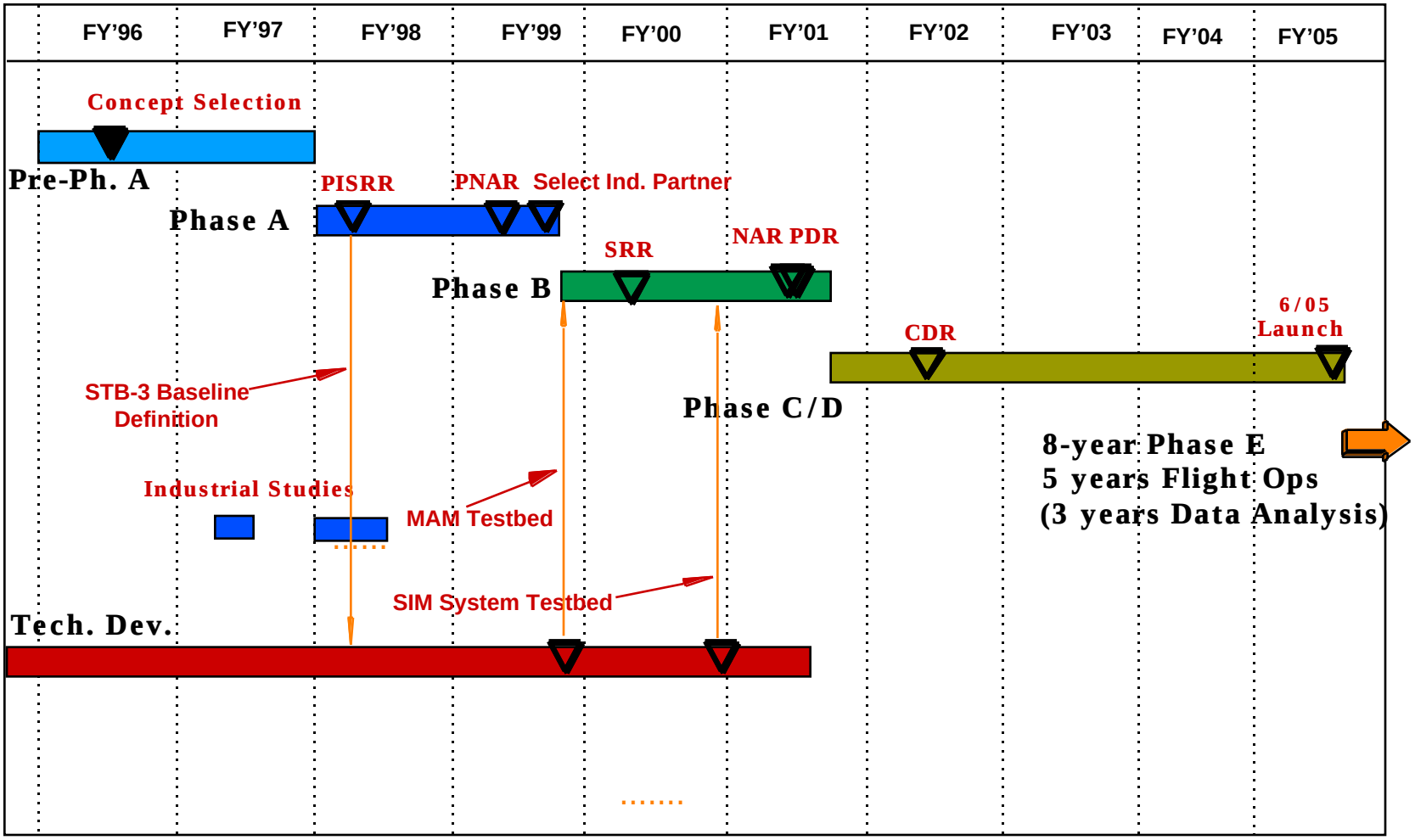

SPACE INTERFEROMETRY MISSION

SIM

Project Organization

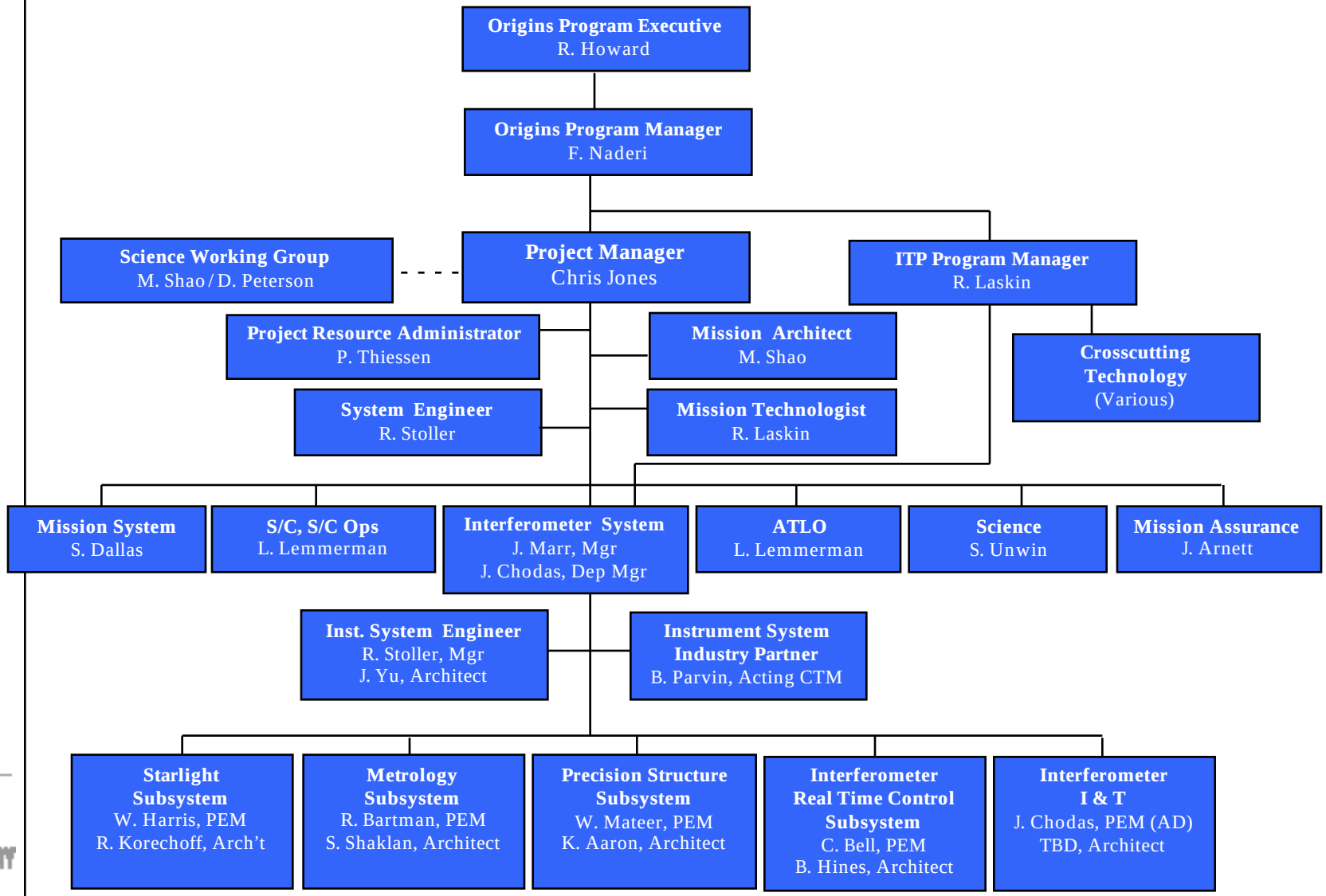

SPACE INTERFEROMETRY MISSION

SIM

SPACE INTERFEROMETRY MISSION

What's New?

- *New contracting approach*
- *New flight system architecture*
- *New orbit*